YORK FITNESS

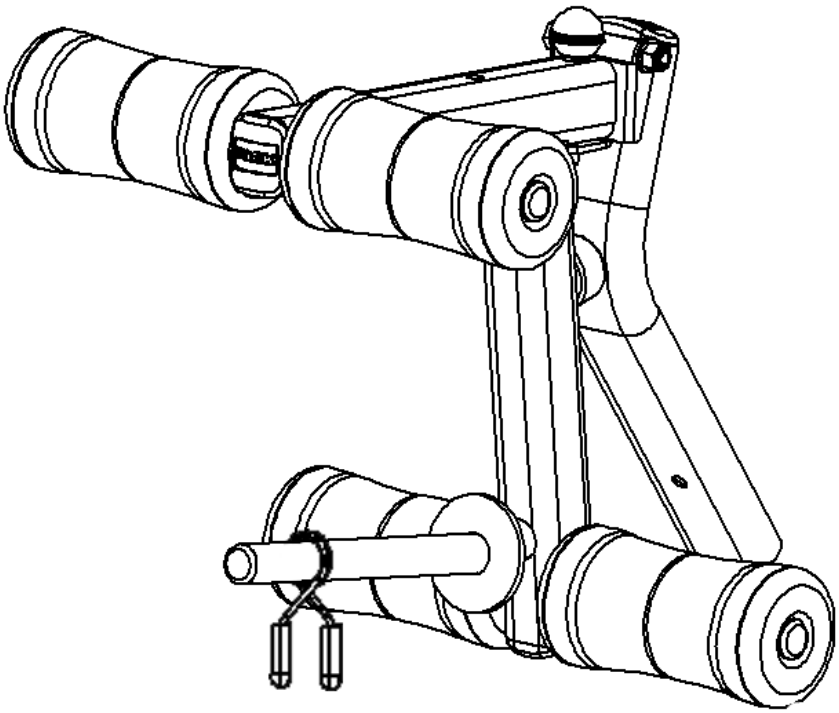

diamond
leg developer attachment

owner's manual

yorkfitness.com

20081208

assembly instructions

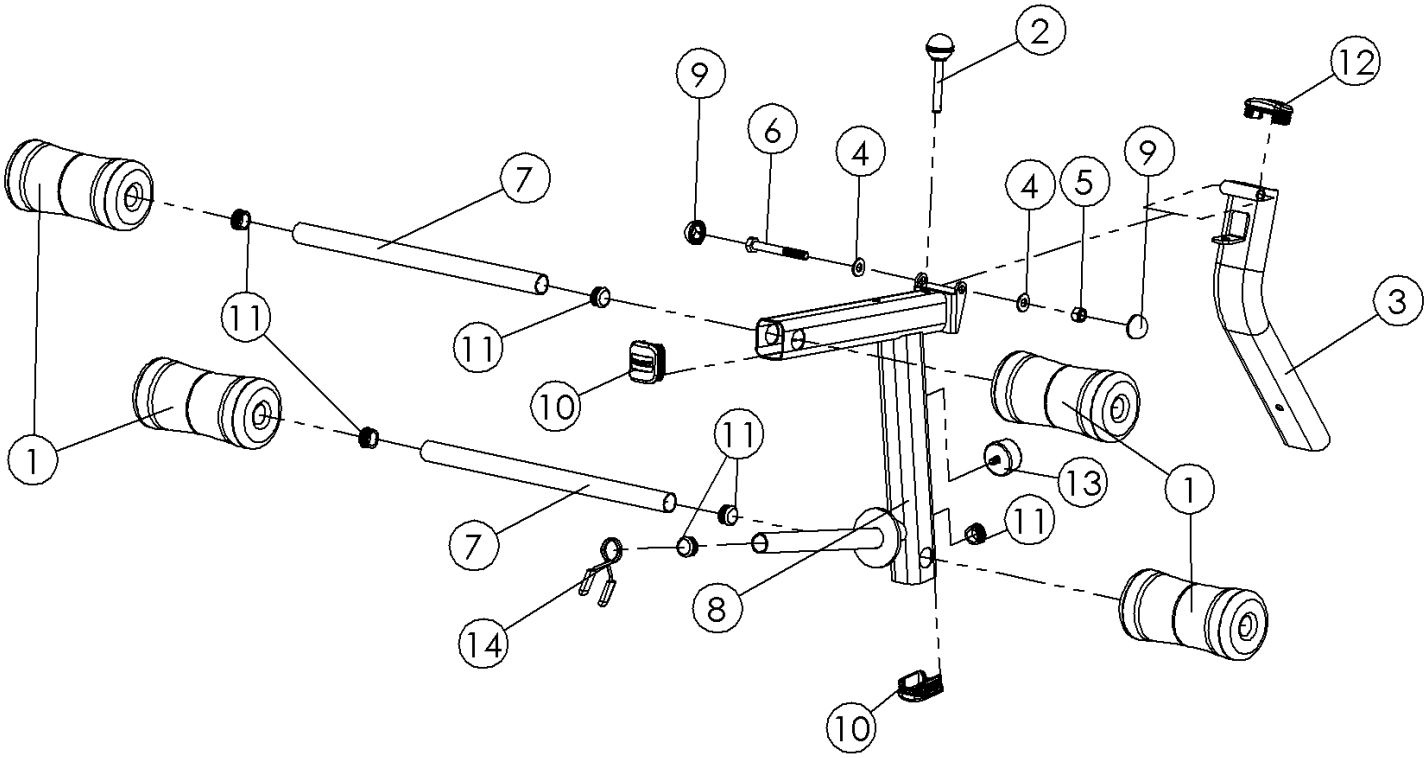

Item	Qty	Part no.	Part Description
1	4	YKF30062b1	Foam rollers (shaped)
2	1	YKF10469o1	Ball lock pin (M10 x 68mm)
3	1	YKA00266g10	Leg mount assembly
4	2	YKF10013z1	Flat washer (M10)
5	1	YKF10012z1	Nyloc nut (M10)
6	1	YKF10031z1	Hex head bolt (M10 x 85mm)
7	2	YKP00229g10	Roller mount tube
8	1	YKA00267g10	Leg pivot assembly
9	2	YKF20024b1	Round Plastic Bolt Cap (M10 x OD30mm)
10	2	YKF20429b1	Rectangle Radius Internal End Cap (50.8 x 44.45mm)
11	6	YKF20010b1	Round Internal End Cap (Ø25.4)
12	1	YKF20428b1	Oval Radius Internal End Cap (70 x 30mm)
13	1	YKF20033b1	Rubber Bumper
14	1	YKF50184c1	Spring Collar

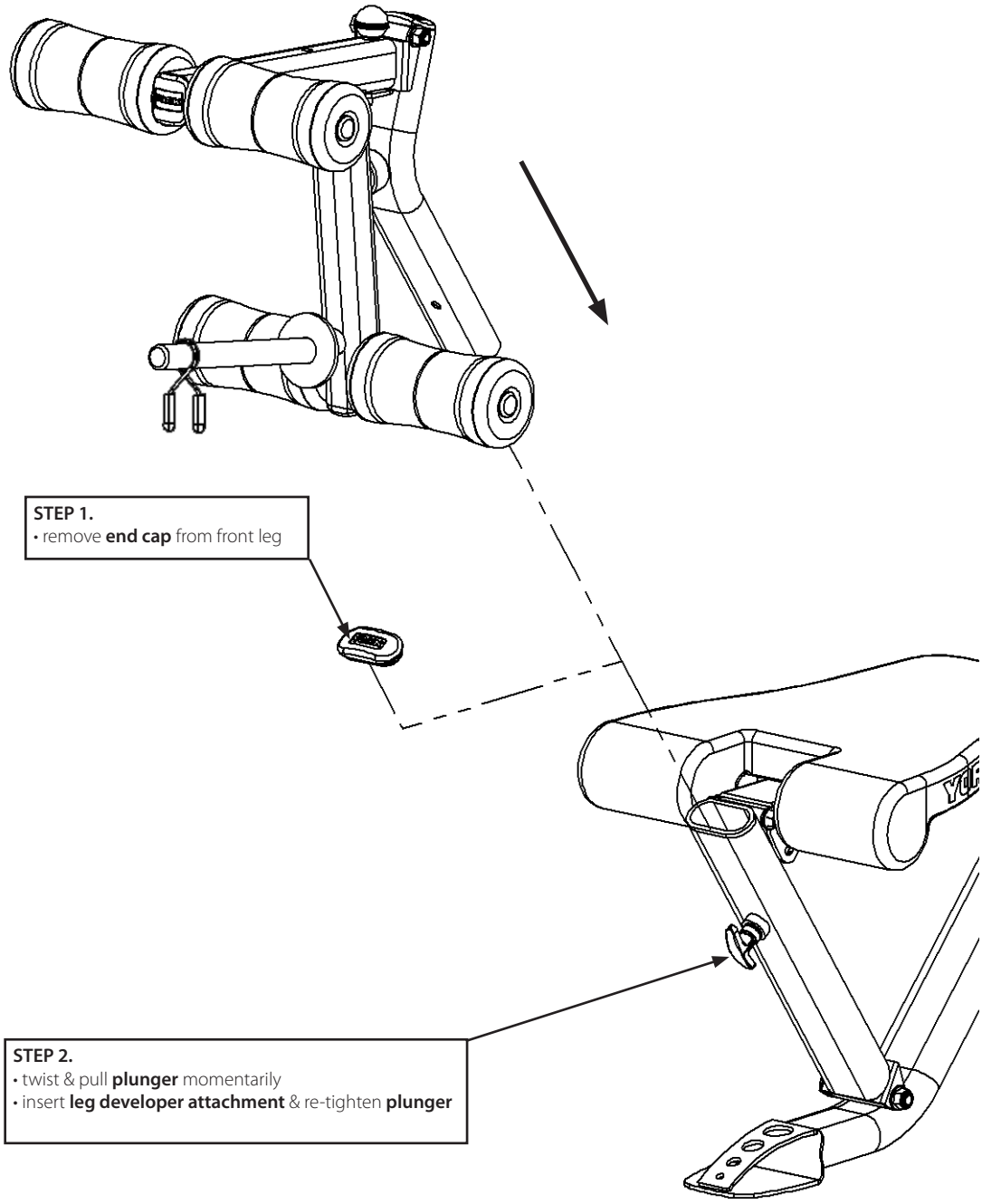
STEP 1.
• remove **end cap** from front leg
STEP 2.
• twist & pull **plunger** momentarily
• insert **leg developer attachment** & re-tighten **plunger**

leg lock setting

when bench in decline position, leg attachment can be locked back to allow legs to brace body from moving down bench when working out.

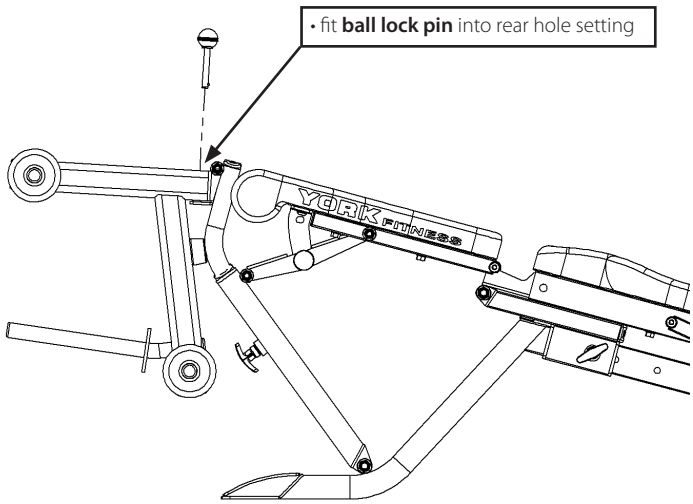

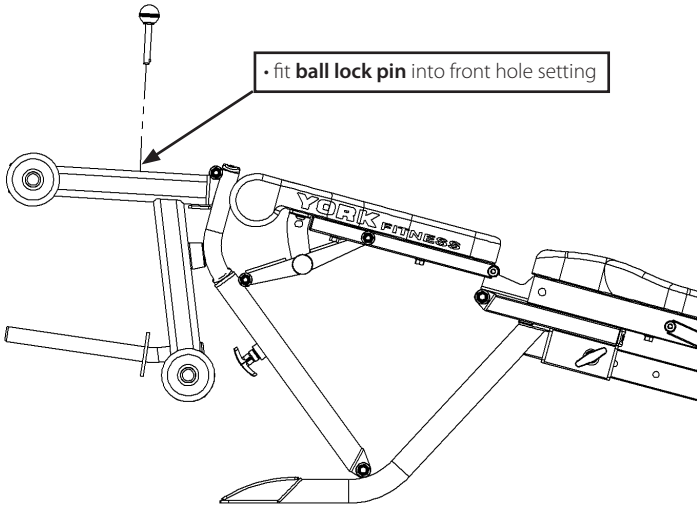

leg extension exercise

ensure bench is in decline position and ball lock pin fitted in front hole setting to release leg assembly.

leg curl exercise

ensure bench is in flat position and ball lock pin fitted in front hole setting to release leg assembly.

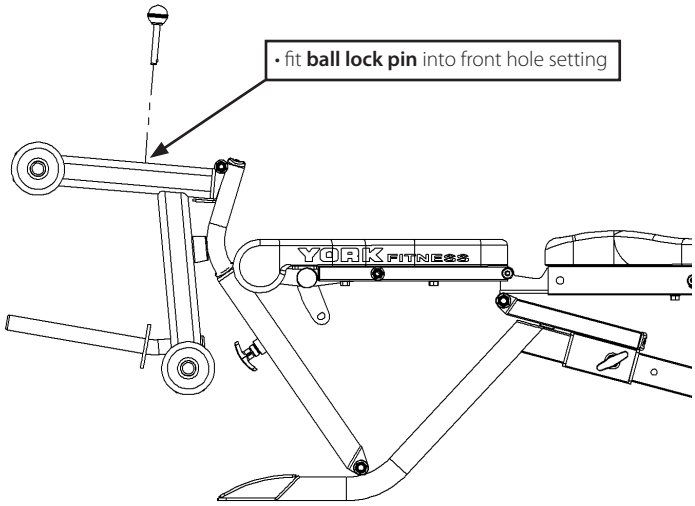

Maximum Weight Limit

50kg Weight

Always remove weights from leg developer before inclining or folding bench.