CURL ATTACHMENT

CODE No.8204

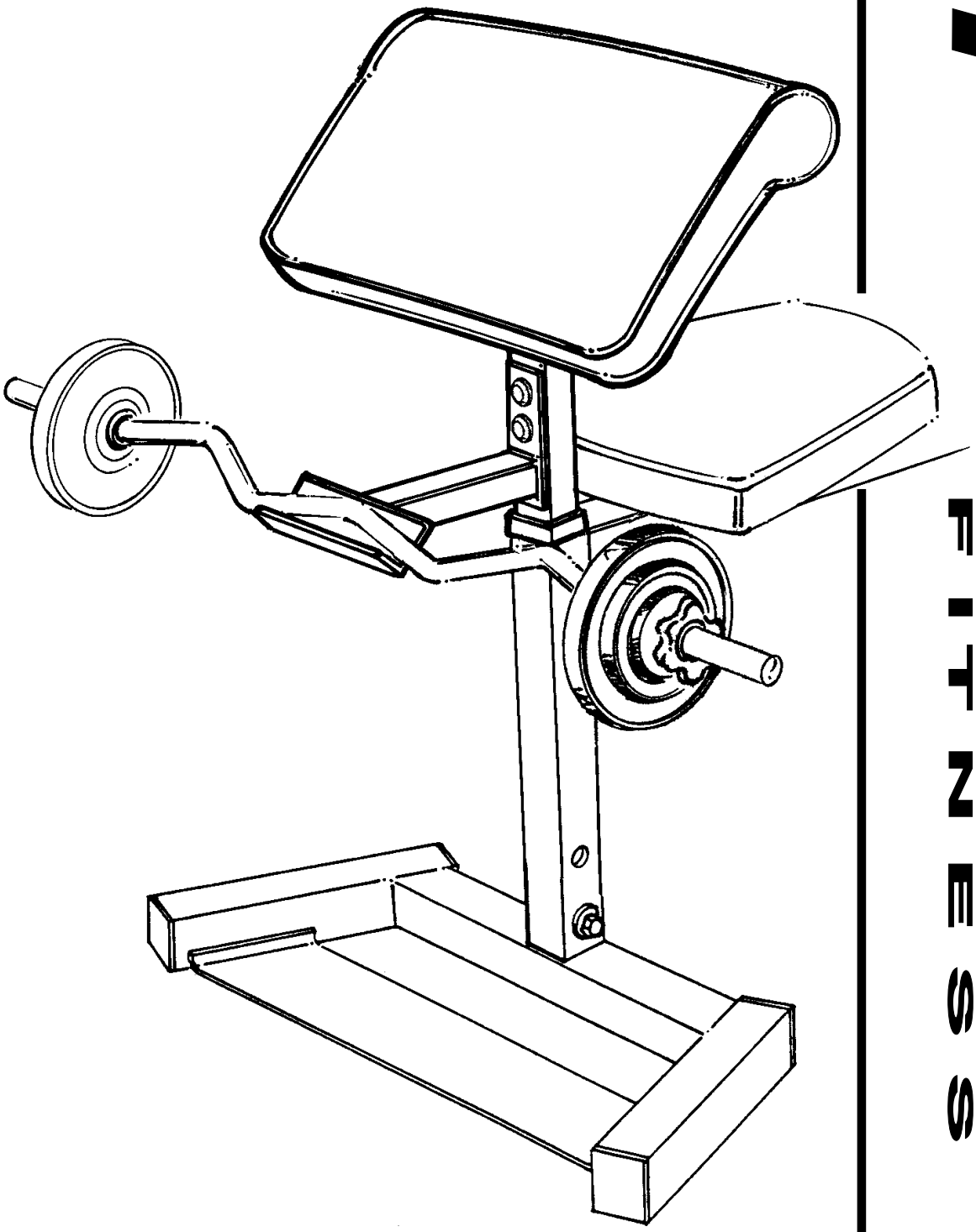

sportline FITNESS

INSTRUCTION MANUAL

YORK® FITNESS

12 / 2002

sportline FITNESS - CURL ATTACHMENT

DESCRIPTION

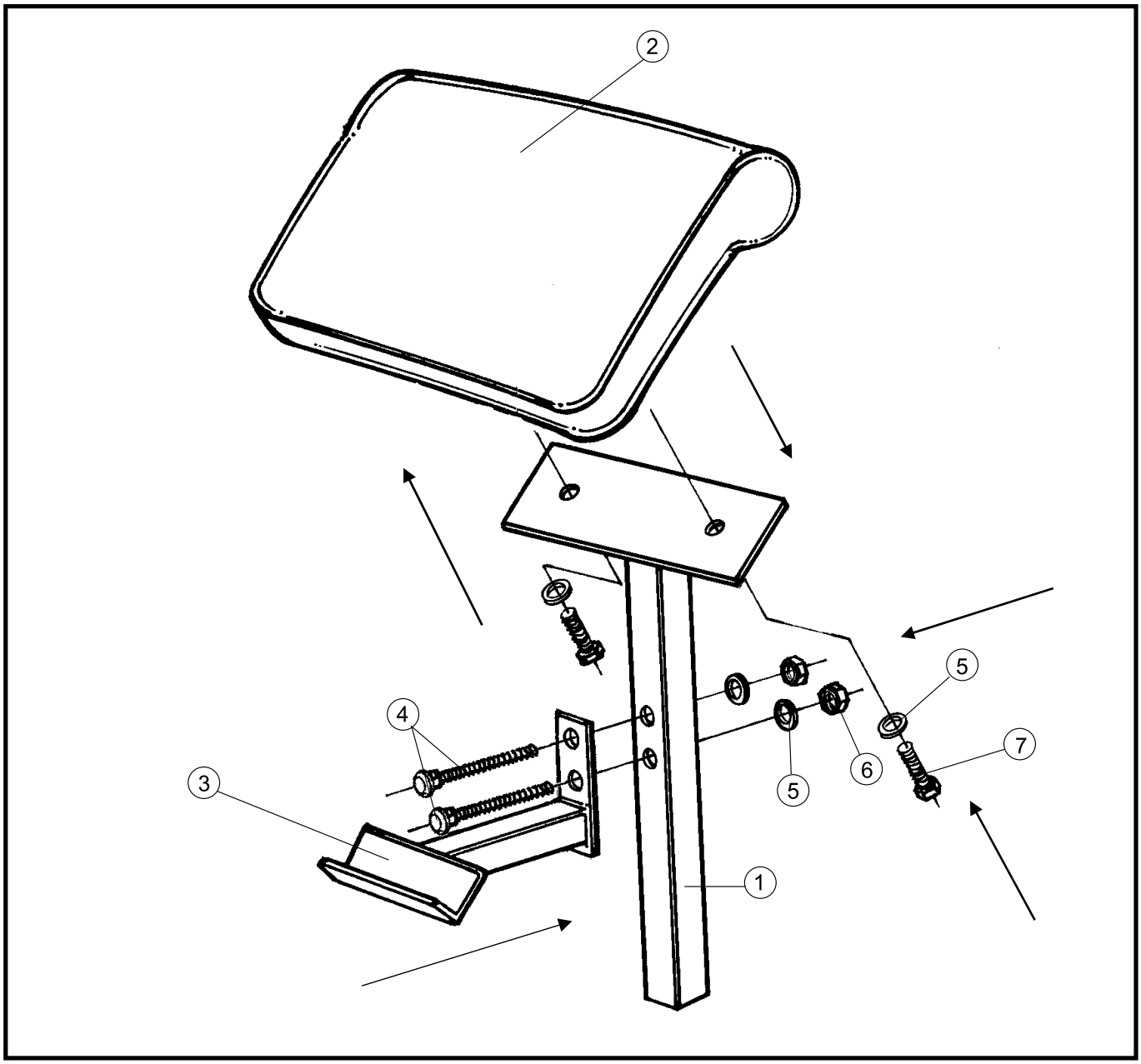

PARTS LIST

	PART NO.	Q'TY	DESCRIPTION
1	# 8204-1	1	ADJUSTABLE ARM REST POST
2	# 8204-2	1	ARM REST UPHOLSTERY
3	# 8204-3	1	CURL BAR REST SUPPORT
4	# 8204-4	2	3/8" x 60mm CARRIAGE BOLT
5	# 8204-5	4	3/8" x 19mm x 1.5mm WASHER
6	# 8204-6	2	3/8" NYLOCK NUT
7	# 8204-7	2	3/8" x 1" HEX HEAD BOLT